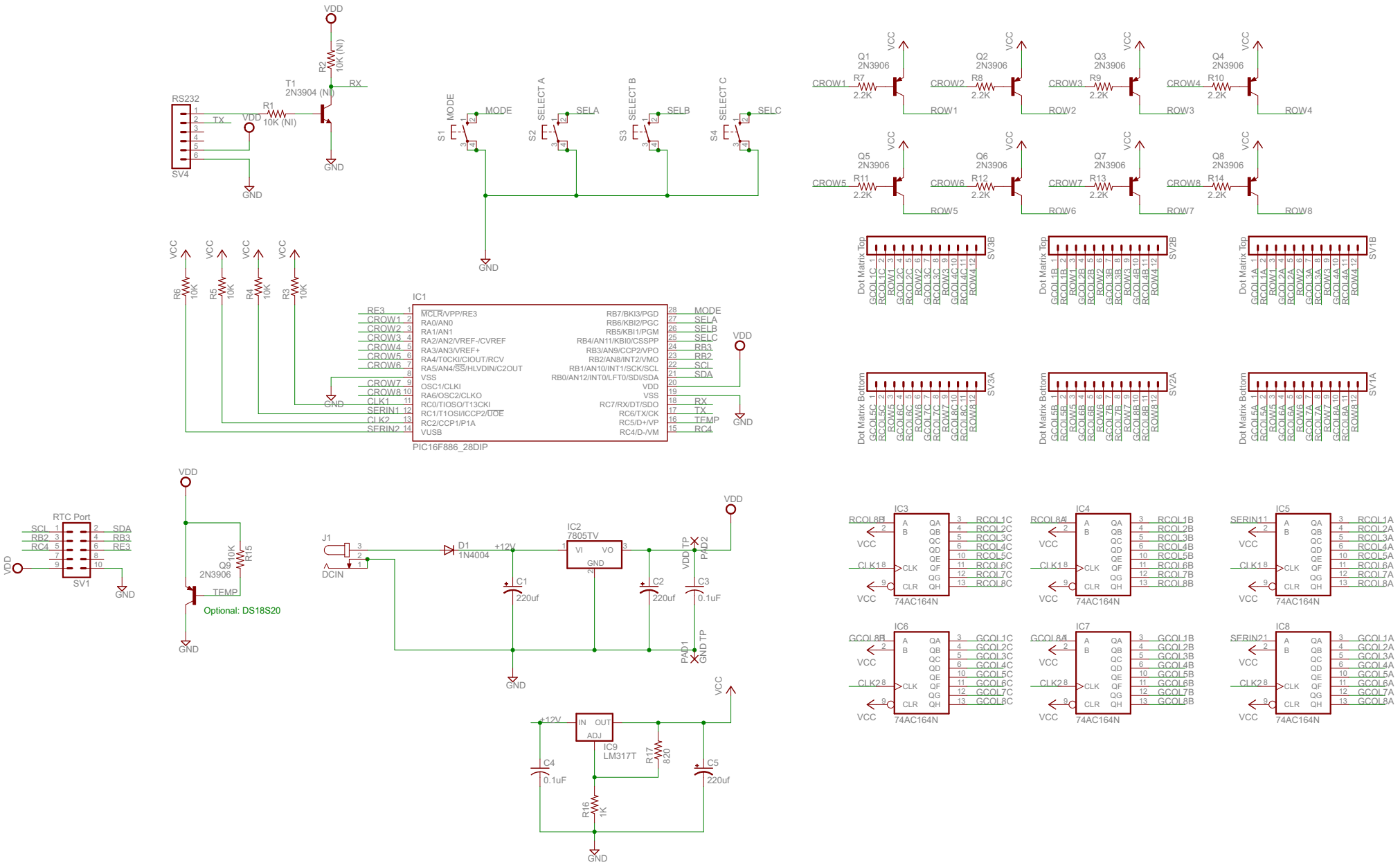
VDD
R2 10K (NI)
T1 2N3904 (NI)
RX
RS232
TX
R1 10K (NI)
SV4
GND
MODE
SELECT A
SELECT B
SELECT C
S1
S2
S3
S4
SELA
SELB
SELC
VCC
Q1 2N3906
Q2 2N3906
Q3 2N3906
Q4 2N3906
Q5 2N3906
Q6 2N3906
Q7 2N3906
Q8 2N3906
CROW1
CROW2
CROW3
CROW4
CROW5
CROW6
CROW7
CROW8
R7 2.2K
R8 2.2K
R9 2.2K
R10 2.2K
R11 2.2K
R12 2.2K
R13 2.2K
R14 2.2K
ROW1
ROW2
ROW3
ROW4
ROW5
ROW6
ROW7
ROW8
Dot Matrix Top
Dot Matrix Bottom
SV3B
SV2B
SV1B
SV3A
SV2A
SV1A
R6 10K
R5 10K
R4 10K
R3 10K
IC1
PIC16F886_28DIP
RE3
CROW1
CROW2
CROW3
CROW4
CROW5
CROW6
CROW7
CROW8
CLK1
SERIN1
CLK2
SERIN2
MCLR/VPP/RE3
RA0/AN0
RA1/AN1
RA2/AN2/VREF-/CVREF
RA3/AN3/VREF+
RA4/T0CKI/CIOUT/RCV
RA5/AN4/SS/HLVDIN/C2OUT
VSS
OSC1/CLKI
RA6/OSC2/CLKO
RC0/TIOSO/T13CKI
RC1/T1OSI/ICCP2/UOE
RC2/CCP1/P1A
VUSB
RB7/BKI3/PGD
RB6/KBI2/PGC
RB5/KBI1/PGM
RB4/AN11/KBI0/CSSPP
RB3/AN9/CCP2/VPO
RB2/AN8/INT2/VMO
RB1/AN10/INT1/SCK/SCL
RB0/AN12/INT0/LFT0/SDI/SDA
VDD
VSS
RC7/RX/DT/SDO
RC6/TX/CK
RC5/D+/VP
RC4/D-/VM
MODE
SELA
SELB
SELC
RB3
RB2
SCL
SDA
RX
TX
TFMP
RC4
RTC Port
SCL
RB2
RC4
SDA
RB3
RE3
SV1
Q9 2N3906
R15 10K
TEMP
Optional: DS18S20
J1
DCIN
D1 1N4004
+12V
IC2 7805TV
VI
VO
GND
C1 220uf
C2 220uf
C3 0.1uF
VDD TP
PAD2
PAD1
GND TP
IC9 LM317T
IN
OUT
ADJ
R17 820
R16 1K
C4 0.1uF
C5 220uf
IC3
IC4
IC5
IC6
IC7
IC8
74AC164N
RCOL8B
RCOL8A
SERIN1
GCOL8B
GCOL8A
SERIN2
CLK1
CLK2
A
B
CLK
CLR
QA
QB
QC
QD
QE
QF
QG
QH
RCOL1C
RCOL2C
RCOL3C
RCOL4C
RCOL5C
RCOL6C
RCOL7C
RCOL8C
RCOL1B
RCOL2B
RCOL3B
RCOL4B
RCOL5B
RCOL6B
RCOL7B
RCOL8B
RCOL1A
RCOL2A
RCOL3A
RCOL4A
RCOL5A
RCOL6A
RCOL7A
RCOL8A
GCOL1C
GCOL2C
GCOL3C
GCOL4C
GCOL5C
GCOL6C
GCOL7C
GCOL8C
GCOL1B
GCOL2B
GCOL3B
GCOL4B
GCOL5B
GCOL6B
GCOL7B
GCOL8B
GCOL1A
GCOL2A
GCOL3A
GCOL4A
GCOL5A
GCOL6A
GCOL7A
GCOL8A