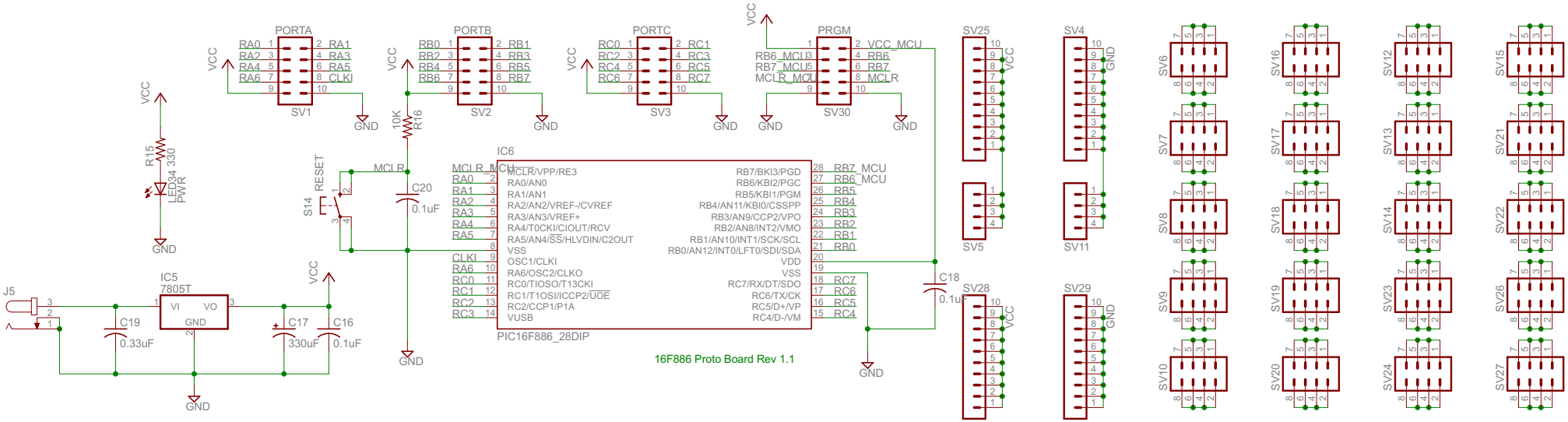
PORTA
RA0 1
RA2 3
RA4 5
RA6 7
9
2 RA1
4 RA3
6 RA5
8 CLKI
10
SV1
VCC
GND
PORTB
RB0 1
RB2 3
RB4 5
RB6 7
9
2 RB1
4 RB3
6 RB5
8 RB7
10
SV2
VCC
GND
PORTC
RC0 1
RC2 3
RC4 5
RC6 7
9
2 RC1
4 RC3
6 RC5
8 RC7
10
SV3
VCC
GND
PRGM
RB6_MCU3
RB7_MCU5
MCLR_MCU
1
9
2 VCC_MCU
4 RB6
6 RB7
8 MCLR
10
SV30
VCC
GND
GND
R15
330
LED34
PWR
VCC
GND
10K
R16
MCLR
RESET
S14
C20
0.1uF
IC6
MCLR_MCU
RA0
RA1
RA2
RA3
RA4
RA5
CLKI
RA6
RC0
RC1
RC2
RC3
MCLR/VPP/RE3
RA0/AN0
RA1/AN1
RA2/AN2/VREF-/CVREF
RA3/AN3/VREF+
RA4/T0CKI/CIOUT/RCV
RA5/AN4/SS/HLVDIN/C2OUT
VSS
OSC1/CLKI
RA6/OSC2/CLKO
RC0/TIOSO/T13CKI
RC1/T1OSI/ICCP2/UOE
RC2/CCP1/P1A
VUSB
RB7/BKI3/PGD
RB6/KBI2/PGC
RB5/KBI1/PGM
RB4/AN11/KBI0/CSSPP
RB3/AN9/CCP2/VPO
RB2/AN8/INT2/VMO
RB1/AN10/INT1/SCK/SCL
RB0/AN12/INT0/LFT0/SDI/SDA
VDD
VSS
RC7/RX/DT/SDO
RC6/TX/CK
RC5/D+/VP
RC4/D-/VM
28 RB7_MCU
27 RB6_MCU
26 RB5
25 RB4
24 RB3
23 RB2
22 RB1
21 RB0
20
19
18 RC7
17 RC6
16 RC5
15 RC4
PIC16F886_28DIP
16F886 Proto Board Rev 1.1
C18
0.1uF
GND
J5
IC5
7805T
VI
VO
GND
C19
0.33uF
C17
330uF
C16
0.1uF
VCC
GND
SV25
SV5
SV28
VCC
SV4
SV11
SV29
GND
SV6
SV7
SV8
SV9
SV10
SV16
SV17
SV18
SV19
SV20
SV12
SV13
SV14
SV23
SV24
SV15
SV21
SV22
SV26
SV27