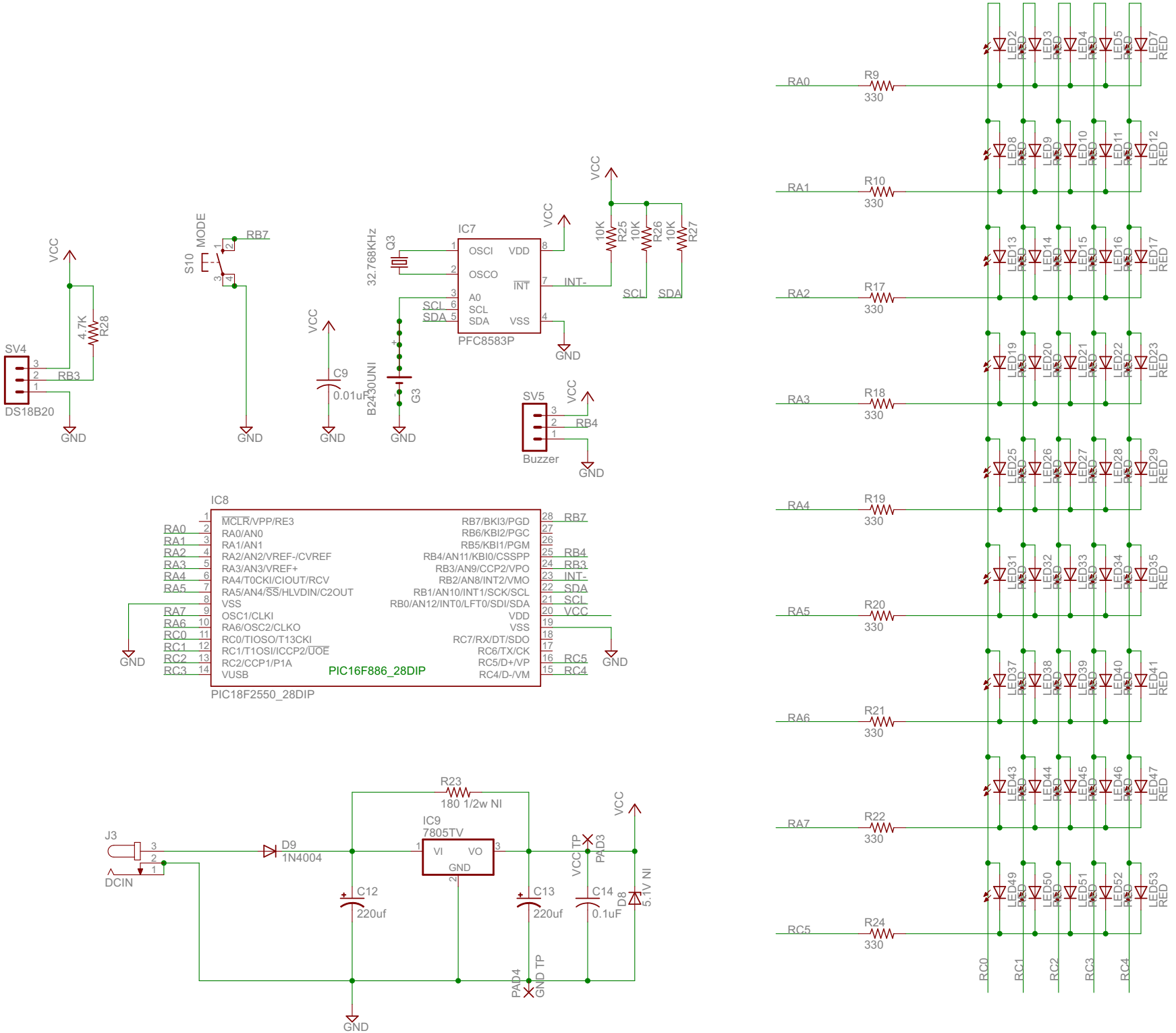
SV4
DS18B20
VCC
4.7K
R28
RB3
GND
S10
MODE
RB7
C9
0.01uF
32.768KHz
Q3
B2430UNI
G3
IC7
PFC8583P
OSCI
OSCO
A0
SCL
SDA
VDD
VSS
INT
INT-
10K
R25
R26
R27
SV5
Buzzer
RB4
IC8
PIC18F2550_28DIP
PIC16F886_28DIP
MCLR/VPP/RE3
RA0/AN0
RA1/AN1
RA2/AN2/VREF-/CVREF
RA3/AN3/VREF+
RA4/T0CKI/CIOUT/RCV
RA5/AN4/SS/HLVDIN/C2OUT
VSS
OSC1/CLKI
RA6/OSC2/CLKO
RC0/TIOSO/T13CKI
RC1/T1OSI/ICCP2/UOE
RC2/CCP1/P1A
VUSB
RB7/BKI3/PGD
RB6/KBI2/PGC
RB5/KBI1/PGM
RB4/AN11/KBI0/CSSPP
RB3/AN9/CCP2/VPO
RB2/AN8/INT2/VMO
RB1/AN10/INT1/SCK/SCL
RB0/AN12/INT0/LFT0/SDI/SDA
VDD
VSS
RC7/RX/DT/SDO
RC6/TX/CK
RC5/D+/VP
RC4/D-/VM
RC5
RC4
J3
DCIN
D9
1N4004
R23
180 1/2w NI
IC9
7805TV
VI
VO
GND
C12
220uf
C13
220uf
C14
0.1uF
D8
5.1V NI
VCC TP
PAD3
PAD4
GND TP
R9
R10
R17
R18
R19
R20
R21
R22
R24
330
RA0
RA1
RA2
RA3
RA4
RA5
RA6
RA7
RC5
RC0
RC1
RC2
RC3
RC4
LED2
LED3
LED4
LED5
LED7
LED8
LED9
LED10
LED11
LED12
LED13
LED14
LED15
LED16
LED17
LED19
LED20
LED21
LED22
LED23
LED25
LED26
LED27
LED28
LED29
LED31
LED32
LED33
LED34
LED35
LED37
LED38
LED39
LED40
LED41
LED43
LED44
LED45
LED46
LED47
LED49
LED50
LED51
LED52
LED53
RED